J Cancer Allied Spec 2024;10(2):8

Original Article

Marginal Contribution of Pathogenic *RAD51D* Germline Variants to Pakistani Early-Onset and Familial Breast/Ovarian Cancer Patients

Noor Muhammad[1], Muhammad Sohail Afzal[2], Ute Hamann[3], Muhammad Usman Rashid[4]*

[1]Department of Basic Sciences, Shaukat Khanum Memorial Cancer Hospital and Research Centre, Lahore, Pakistan, [2]Department of Life Sciences, University of Management and Technology, Lahore, Pakistan, [3]Molecular Genetics of Breast Cancer, German Cancer Research Center, Heidelberg, Germany, [4]Department of Basic Sciences, Shaukat Khanum Memorial Cancer Hospital and Research Centre, Lahore, Pakistan

Received: 14 December 2023/Accepted: 21 June 2024

OPEN ACCESS

Correspondence:
Muhammad Usman Rashid, Shaukat Khanum Memorial Cancer Hospital and Research Centre, Khayaban-e-Firdousi 7-A, Block R3, M.A Johar Town, Lahore, 54000, Pakistan.
E-mail: usmanr@skm.org.pk

Citation: Muhammad N, Afzal MS, Hamann U, Rashid MU. Marginal Contribution of Pathogenic *RAD51D* Germline Variants to Pakistani Early-Onset and Familial Breast/Ovarian Cancer Patients. J Cancer Allied Spec [Internet]. 2024;10(2):1-10. https://doi.org/10.37029/jcas.v10i2.617

Copyright: © 2024 Muhammad N, *et al*. This is an open access article distributed under the terms of the Creative Commons Attribution-NonCommercial-ShareAlike 4.0 International License, which permits unrestricted use, distribution, and reproduction in any medium, provided the original author and source are credited.

Funding: The study was funded by the institutional support (grant # ONC-BRCA-002) from Shaukat Khanum Memorial Cancer Hospital and Research Centre, Lahore, Pakistan.

Conflicts of Interest: The author(s) declare(s) that there are no conflicts of interest.

Abstract

Introduction: *RAD51D* has been reported as a breast cancer (BC) and ovarian cancer (OC) predisposition gene, particularly among Caucasian populations. We studied the prevalence of *RAD51D* variants in Pakistani BC/OC patients. **Materials and Methods:** In total, 371 young or familial BC/OC patients were thoroughly analyzed for *RAD51D* sequence variants using denaturing high-performance liquid chromatography pursued by DNA sequencing of differentially eluted amplicons. We also assessed the pathogenic effects of novel variants using in-silico algorithms. All detected *RAD51D* variants were investigated in 400 unaffected controls. **Results:** No pathogenic *RAD51D* variant was detected. However, we identified nine unique heterozygous variants. Of these, two missense variants (p.Pro10Leu and p.Ile311Asn) and one intronic variant (c.481-26_23delGTTC) were classified as in silico-predicted variants of uncertain significance, with a frequency of 0.8% (3/371). The p.Pro10Leu variant was detected in a 28-year-old female BC patient of Punjabi ethnic background, whose mother and maternal cousin had BCs at ages 53 and 40, respectively. This variant was also detected in 1/400 (0.25%) healthy controls, where the control subject's daughter had acute lymphoblastic leukemia. The p.Ile311Asn variant was identified in a female BC patient at age 29 of Punjabi ethnicity and in 1/400 (0.25%) healthy controls, where the control subject's daughter had Hodgkin's disease at age 14. A novel intronic variant, c.481-26_-23delGTTC, was found in a 30-year-old Punjabi female BC patient but not in 400 healthy controls. **Conclusion:** No pathogenic *RAD51D* variant was identified in the current study. Our study data suggested a negligible association of *RAD51D* variants with BC/OC risk in Pakistani women.

Keywords: Breast cancer, germline variants, ovarian cancer, Pakistan, *RAD51D*

Introduction

Breast cancer (BC) and ovarian cancer (OC) account for a substantial proportion of cancer-related deaths worldwide. Germline pathogenic variants in the known BC/OC predisposition genes are responsible for approximately 6–10% of BC and 18–29% of OC patients.[1] These genes are crucial in maintaining genomic stability through the homologous recombination-mediated DNA repair pathway.[1] Among the genes involved in this pathway, RAD51 paralog D (*RAD51D*) has been reported as a BC and OC vulnerability gene among Caucasians.[2] Subsequent studies in both Asian and Caucasian populations have confirmed these findings, though they have reported considerable variability in the frequencies of pathogenic *RAD51D* variants. A recent meta-analysis and the Cancer Risk Estimates Related to Susceptibility (CARRIERS) consortium study reported pathogenic *RAD51D* variants in 0.41% (94/22,787) of OC patients[3] and 0.09% (36/38,332) of BC patients.[4]

Individuals harboring pathogenic *RAD51D* variants face lifetime risks of 20-44% and 13–36% of developing BC and OC, respectively, depending on their family history of these cancers.[5] Considering these risks, the National Comprehensive Cancer Network (NCCN) has recommended surveillance and risk-reducing strategies for BC and OC management in individuals harboring pathogenic *RAD51D* variants, such as annual mammograms starting at age 40 and risk-reducing salpingo-oophorectomy at age 45-50 (NCCN Guidelines V3.2023). However, the successful implementation of optimal genetic testing and risk management strategies in BC/OC patients necessitates comprehensive data on the prevalence and significance of pathogenic *RAD51D* variants in different populations.

In Pakistan, limited data exist regarding the genetic variability of *RAD51D*. Notably, pathogenic variants in high-risk genes such as *BRCA1*, *BRCA2,* and *TP53*, along with the moderate-risk genes *RAD51C, CHEK2, PALB2,* and *RECQL*, collectively explain only 27% of young or familial BC/OC patients.[6] Therefore, to address this knowledge gap, we aimed to investigate the prevalence of *RAD51D* variants in 371 BC and/or OC patients from Pakistan, who had previously tested negative for pathogenic variants in *BRCA1/2, TP53, CHEK2, RAD51C, PALB2, RECQL,* and *FANCM*. All *RAD51D* variants identified in study cases were further screened in 400 Pakistani female controls.

Materials and Methods

Study population

For this study, we selected index patients from 371 BC/OC families enrolled at the Shaukat Khanum Memorial Cancer Hospital and Research Centre (SKMCH&RC), Lahore, Pakistan, between June 2001 and January 2012. All these patients were either presented with invasive BC or epithelial OC, further categorized into six risk groups as previously described.[7] All these patients were previously screened and confirmed not carrying *BRCA1/2* and *PALB2* small-range pathogenic variants, as well as *BRCA1/2* large genomic rearrangements.[7,8] Most of these patients were also not harboring pathogenic variants in *CHEK2* (n = 346), *RAD51C* (n = 346),[9] *RECQL* (n = 187),[6] *FANCM* (n = 154), and *TP53* (n = 97). Notably, the patients presented with BC and OC in the same subject were considered as two standalone cases. The tumors of the BC patients were assessed for estrogen receptor (ER), progesterone receptor (PR), and human epidermal growth factor receptor 2 (HER2) expression by immunohistochemical analyses as described previously.[7]

In the control group, 400 Pakistani healthy women were included having no BC or OC in themselves or in their blood relatives. These women were identified from the SKMCH&RC repository of unaffected controls registered in a case–control study, as described elsewhere.[7] The study received ethical approval from the Institutional Review Board (IRB) of SKMCH&RC. Before the collection of blood samples, each research subject provided written informed consent.

Ethics approval

All procedures performed in this study involving human participants were in accordance with the ethical standards of the Institutional and/or National Research Committee and with the 1964 Helsinki Declaration and its later amendments or comparable ethical standards. The study was approved by the IRB of SKMCH&RC (IRB approval numbers Date: June 01, 2001/No. ONC-BRCA-001 and Date: May 05, 2006/No. ONC-BRCA-002). Informed consent was obtained from all individual participants included in the study.

Molecular analyses

The entire coding sequence of *RAD51D* (Genbank accession number NM_002878.3) along with exon-intron junctions was tested in the 371 BC/OC patients using denaturing high-performance liquid chromatography (DHPLC) analysis on the WAVE 4500 DNA Fragment Analysis System (Transgenomics, Omaha, NE). DNA amplification was performed using previously reported primers.[2,10] The set-up of amplification reactions, thermal cycling profiles, and DHPLC analysis settings can be provided on request. DNA samples exhibiting variant DHPLC elution profiles were subjected to bidirectional sequencing using a programmed 3500 Genetic Analyzer (Applied Biosystems, Foster City, CA). The *RAD51D* variants identified in the cases were subsequently screened in the 400 control samples.

In silico analyses and variants classification

Novel *RAD51D* variants ($n = 2$) previously described variants of uncertain significance (VUS) ($n = 2$), an unclassified variant ($n = 1$), and a variant with conflicting interpretation ($n = 1$) were assessed using *in silico* analysis algorithms. The functional impact of missense variants was assessed using five individual web tools, as previously described.[7] In addition, three meta-prediction tools, including Combined Annotation-Dependent Depletion (CADD) (https://cadd.gs.washington.edu/), Rare Exome Variant Ensemble Learner (REVEL) (https://sites.google.com/site/revelgenomics), and BayesDel (https://fengbj-laboratory.org/BayesDel/BayesDel.html), were also utilized.[11] These tools predicted the consequences of missense variants on the protein based on: (i) Evolutionary conservation of amino acids among different species (SIFT and Align-GVGD), (ii) alterations in protein structure and function (PolyPhen-2, MutPred, and SNAP2), and (iii) several computational, mathematical, and biochemical parameters from genomic and proteomic databases (REVEL, CADD, and BayesDel). Non-coding variants were assessed for likely splicing impact using splice prediction tools through the Alamut software user interface (Interactive Biosoftware) with default parameters.[7] The predictions by these tools are primarily based on the alterations caused by the variant of interest in sequence patterns at spliceosome binding sites. The variants were categorized in accordance with the standard variant classification criteria described previously.[12]

Results

Of the 371 study cases, 181 (48.8%) were young BC (≤30 years of age), 127 (34.2%) BC patients were from the families having two or more BC patients with at least one of them diagnosed ≤50 years of age, 23 (6.2%) patients belonged to families with both BC and OC, 22 (5.9%) belonged to OC only families, and 18 (4.9%) were male BC patients diagnosed at any age [Table 1]. Of the 343 BC patients, 104 (30.3%) exhibited the triple-negative BC (TNBC) phenotype. The mean age of disease diagnosis was 33.7 years (range 19–73 years) for female BC ($n = 325$), 50.2 years (range 30–73 years) for male BC ($n = 18$), and 35.3 years (range 22–60 years) for OC ($n = 35$) patients. Among the female BC patients, 9.8% (32/325) were presented with bilateral BC.

In total, nine unique heterozygous *RAD51D* variants were detected, including four missense variants (p.Pro10Leu, p.Arg165Gln, p.Ile311Asn, and p.Ser320Asn), four intronic variants (c.83-16C>T, c.144+33G>C, c.481-26_-23delGTTC, and c.481-7G>T), and one silent variant (p.Ser78Ser). Of these, two non-coding variants (c.83-16C>T and

Table 1: Frequency of *RAD51D* VUS according to family structure

Phenotype of families	No. of families	Families with *RAD51D* VUS, *n* (%)
All families	371	3 (0.8)
Early-onset BC (1 case ≤30 years)	181	2 (1.1)
Familial BC (≥2 cases, ≥1 diagnosed≤50 years)	127	1 (0.8)
BC and OC (≥1 BC and≥1°C)	23[a]	0 (0)
OC (>1°C <45 years)	22	0 (0)
Male BC (1 case diagnosed at any age)	18	0 (0)
TNBC status		
TNBC	104	0 (0)
Non-TNBC	224	3 (1.3)
Unknown	15	0 (0)

BC: Breast cancer; OC: Ovarian cancer; TNBC: Triple-negative breast cancer; VUS: Variants of uncertain significance.
[a]BC and OC in the same patient were considered as two standalone cases. This number includes index patients diagnosed with female BC (*n*=10), BC and OC (*n*=7), and OC (*n*=6)

c.481-26_-23delGTTC) were novel and exclusively detected in the Pakistani population, while the remaining seven variants have been reported in other populations or observed in various databases including ClinVar, LOVD, or gnomAD [Table 2].

Three coding variants already reported in ClinVar as VUS (p.Pro10Leu, p.Ile311Asn, and p.Ser320Asn) were evaluated for their functional impact using *in silico* tools [Table 3]. Of these, two missense variants (p.Pro10Leu and p.Ile311Asn) were categorized as VUS according to the standard variant classification guidelines [Table 3]. Three non-coding variants, including two novel variants (c.83-16C>T and c.481-26_-23delGTTC) and a previously reported unclassified variant (c.144+33G>C), underwent *in silico* analysis for their potential splicing effect [Table 4]. Of these, one intronic variant (c.481-26_-23delGTTC) was categorized as VUS according to the standard variant classification guidelines [Table 4]. The remaining two non-coding variants and one coding variant were classified as benign.

The missense variant, p.Pro10Leu, was detected in a 28-year-old female BC patient [III:11, Figure 1] of Punjabi ethnicity. She was diagnosed with grade III, lymph node-involved invasive ductal carcinoma (IDC) with positive staining of ER and PR but negative for HER2 expression. The index patient's mother [II:7, Figure 1] and a maternal cousin [III:4, Figure 1] were also presented with BC at ages 53 and 40, respectively. This variant was also detected in one out of the 400 (0.25%) healthy controls who reported that her daughter was diagnosed with acute lymphoblastic leukemia. This variant was categorized as deleterious by all five *in silico* tools and benign by all three meta-prediction tools. The minor allele frequency of this variant is low (0.04%; 12/30606) among South Asians in the gnomAD. Based on these results, p.Pro10Leu was categorized as a VUS.

Another missense variant, p.Ile311Asn, was found in a female BC patient diagnosed at age 29 of Punjabi ethnicity. She presented with grade III, lymph node-negative IDC, expressing ER but negative for PR and HER2, having no blood relative affected with BC/OC or other cancer. This variant was also detected in one out of the 400 (0.25%) healthy controls who reported that her daughter was diagnosed with Hodgkin's disease at age 14. This variant has conflicting interpretations in ClinVar and has a minor allele frequency of 0.03% (9/30616) among South Asian populations in gnomAD. It was anticipated as disease-causing by four of the five different *in silico* prediction tools and benign by all three meta-prediction tools. Based on standard variant classification criteria, it was classified as VUS.

Table 2: *RAD51D* germline variants identified in breast/ovarian cancer patients from Pakistan

Location	Coding (c.) DNA Sequence[a] (amino acid change)	SNP ID	Effect	Prevalence, *n* (%)		Minor allele frequency, *n* (%)			Reference
				Cases *n*=371	Controls *n*=400	Cases *n*=742	Controls *n*=800	gnomAD[d], South Asians	
Variants of uncertain significance									
Exon 1	c. 29C >T (p.Pro10Leu)[b]	rs759505297	Missense	1 (0.27)	1 (0.25)	1 (0.14)	1 (0.13)	12/30606 (0.04)	ClinVar
Intron 5	c. 481-26_-23delGTTC[b]	-	Intronic	1 (0.27)	0 (0)	1 (0.14)	0 (0)	-	Novel
Exon 10	c. 932T >A (p.Ile311Asn)[b]	rs145309168	Missense	1 (0.27)	1 (0.25)	1 (0.14)	1 (0.13)	9/30616 (0.03)	ClinVar, LOVD
Benign variants									
Intron 1	c. 83-16C >T[b]	-	Intronic	0 (0)	1 (0.25)	0 (0)	1 (0.13)	-	Novel
Intron 2	c. 144+33G >C[b]	rs28363260	Intronic	1 (0.27)	5 (1.25)	1 (0.14)	5 (0.63)	222/30606 (0.73)	gnomAD
Exon 3	c. 234C >T (p.Ser78Ser)[c]	rs9901455	Silent	38 (10.2)	74 (18.5)	38 (5.12)	74 (9.25)	2632/30616 (8.60)	ClinVar, LOVD
Intron 5	c. 481-7G>T[c]	rs145832514	Intronic	1 (0.27)	0 (0)	1 (0.14)	0 (0)	-	ClinVar
Exon 6	c. 494G >A (p.Arg165Gln)[c]	rs4796033	Missense	93 (25.1)	112 (28.0)	93 (12.53)	112 (14.0)	4896/30028 (16.3)	ClinVar, LOVD
Exon 10	c. 959G >A (p.Ser320Asn)[b]	rs763683070	Missense	0 (0)	1 (0.25)	0 (0)	1 (0.13)	1/30600 (0.003)	ClinVar

LOVD: Leiden Open Variant Database; SNP: Single nucleotide polymorphism.

[a]Nomenclature follows Human Genome Variation Society (HGVS) (http://www.hgvs.org). Numbering starts at the first A of the first coding ATG (located in exon 1) of NCBI GenBank Accession NM_002878.3.

[b]Predicted by *in silico* analyses.

[c]Previously classified variant in ClinVar database.

[d]gnomAD: Genome Aggregation Database v2.1.1 (https://gnomad.broadinstitute.org/), date accessed July 26, 2023

Table 3: *In silico* analyses of *RAD51D* coding variants identified in breast/ovarian cancer patients from Pakistan

Coding variants	Individual *in silico* prediction tools					*In silico* meta-prediction tools[a]			Classification
	PolyPhen-2	SIFT	Align GVGD	MutPred	SNAP2	REVEL	CADD	BayesDel	
c. 29C >T (p.Pro10Leu)	Probably damaging	Deleterious	C65	Disease	Disease	Benign	Benign	Benign	VUS
c. 932T >A (p.Ile311Asn)	Probably damaging	Deleterious	C0	Disease	Disease	Benign	Benign	Benign	VUS
c. 959G >A (p.Ser-320Asn)	Benign	Tolerated	C0	Polymor-phism	Neutral	Benign	Benign	Benign	Benign

VUS: Variant of uncertain significance
[a]Cutoff scores of BayesDel with noAF >0, CADD phred-scaled>25, and REVEL>0.50 is considered as pathogenic

Table 4: *In silico* analyses of *RAD51D* non-coding variants identified in breast/ovarian cancer patients from Pakistan

Non-coding variants	Splice-site predictions[a]					Classification
	SpliceSite Finder-like	MaxEntScan	NNSPLICE	Gene Splicer	HumanSplice Site Finder	
c. 83-16 C>T	NE	A (0→5.3)	NE	NE	NE	Benign
c. 144+33G >C	NE	A (3.2→5.6)	NE	A (1.0→3.4)	NE	Benign
c. 481-23_-26delGTTC	A (0→85.1)	A (0→8.2)	A (0→1.0)	A (0→9.2)	A (0→88.4)	VUS

A: Acceptor-site; NE: No effect; VUS: Variant of uncertain significance
[a]>20% change in score (i.e., a wild-type splice-site score decreases, and/or a cryptic splice-site score increases) is considered as significant

A novel non-coding variant, c.481-26_-23delGTTC, was identified in a female BC patient diagnosed at age 30 of Punjabi ethnicity. She was diagnosed with grade III, lymph node-involved IDC with positive staining of ER, PR, and HER2. This nucleotide alteration was not detected in the 400 healthy females and was also absent in the literature or various databases including ClinVar, LOVD, and gnomAD. It was identified to initiate a novel splice-acceptor site and abolish the natural acceptor site by all five splice-site prediction algorithms. Based on these *in silico* estimations and the absence of this variant in the control population, c.481-26_-23delGTTC was classified as a VUS.

Discussion

In the present study, we conducted a comprehensive screening of the *RAD51D* and did not identify any pathogenic variants in the 371 Pakistani high-risk BC and/or OC patients. However, three VUS were identified with a frequency of 0.8% (3/371) in this study cohort. A previous retrospective study from the southern region of Pakistan reported one pathogenic *RAD51D* variant (p.Arg300*) in 0.4% (1/273) of BC patients using a multigene panel on a next-generation sequencing platform.[13] The differences in findings may be attributed to variations in study populations, criteria for patient selection, and variants screening approach. The study participants were selected based on age at BC diagnosis (<50 years), TNBC phenotype, or affected relatives with breast, ovarian, pancreatic, and prostate cancer (NCCN 2016 version 1.2016 genetic testing criteria). In contrast, our study specifically focused on young or familial BC/OC patients from the central and north-west regions of Pakistan, and we performed *RAD51D* variant screening using DHPLC and

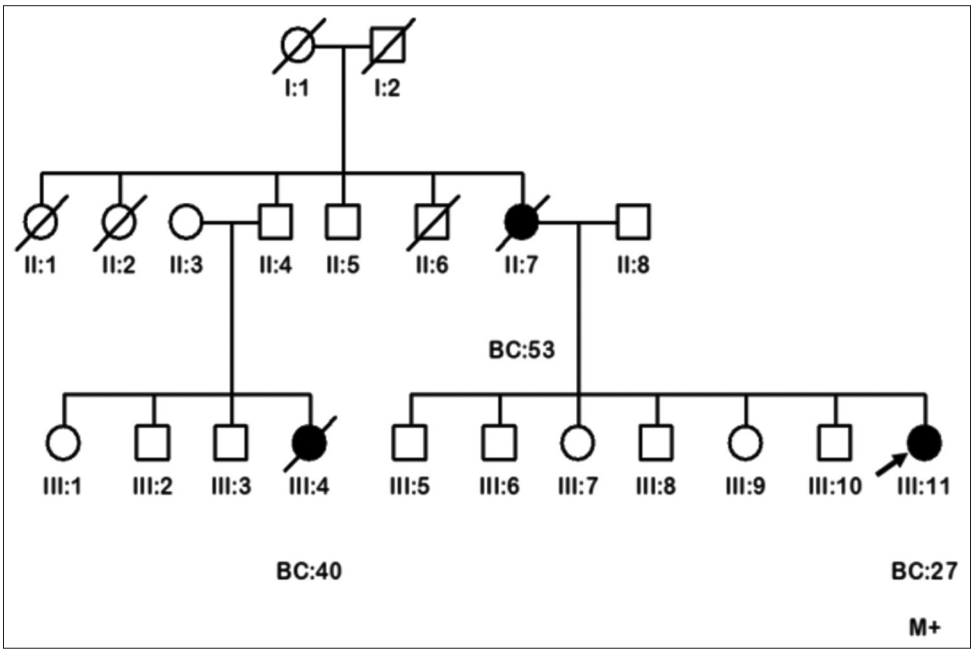

Figure 1: Pedigrees of the breast cancer family (FP:532) carrying *RAD51D* p.Pro10Leu variant of uncertain significance. *Circles* are females, *squares* are males, and a *diagonal slash* indicates a deceased individual. *Filled symbols* show cancer diagnoses. Identification numbers of individuals are below the symbols. The index patient is indicated by an *arrow*. BC: Breast cancer. The numbers following this abbreviation indicate age at cancer diagnosis. M+: Variant carrier

subsequent bidirectional DNA sequencing. Of note, Akbar *et al*. also reported a likely-pathogenic missense variant (p.Ser207Leu) in a 55-year-old female BC patient who also carried a pathogenic *FANCM* variant.[13] Our study results align with another study on 84 sporadic BC patients from the southern region of Pakistan that has similarly not detected any pathogenic *RAD51D* variants using a next-generation sequencing platform.[14] These findings suggest a minimal association of pathogenic *RAD51D* variants with BC/OC risk in the Pakistani women.

Our study findings are consistent with other studies that have not identified pathogenic *RAD51D* variants in BC and/or OC patients from various populations, including India,[15] Taiwan,[16] Finland,[17] and France.[18] However, it is important to acknowledge that pathogenic *RAD51D* variants have been reported in Asian and Caucasian BC/OC patients, with a prevalence varying from 0.1% (6/5589) to 2.9% (3/105) in different studies.[10,19-22] The variations in reported frequency across ethnicities, geographical locations, and study populations emphasize the importance of studying genetic diversity in different populations to better understand BC susceptibility.

In the present study, one *RAD51D* missense variant, p.Pro10Leu, was detected in a familial BC patient and in one out of the 400 healthy controls, where the control subject's daughter was diagnosed with acute lymphoblastic leukemia. The co-segregation analysis of this alteration with BC in the index patient's mother and a maternal cousin was not possible as these relatives were deceased at the time of the index patient's enrollment. This variant is in an extremely conserved N-terminal domain (residues 1–83) of *RAD51D*, essential for single-stranded DNA-specific binding and protein-protein interaction with XRCC2 involved in homologous recombination repair.[23] It has been reported as a VUS in ClinVar and has a low minor allele frequency among South Asians in gnomAD. *In silico* prediction tools predicted it as deleterious by all five tools and benign by all three meta-prediction tools.

This variant was previously reported as a VUS in BC/OC patients (1/1010; 0.1%) from India[19] and in individuals with Lynch syndrome-associated cancer and/or colorectal polyps (1/1260; 0.08%) from the USA.[24] These findings suggested classifying the p.Pro10Leu variant as a VUS.

Another missense variant, p.Ile311Asn, was detected in a young BC patient and in one out of the 400 healthy controls, where the control subject's daughter was diagnosed with Hodgkin's disease. This variant lies in a highly conserved nucleotide in the ATPase domain (residues 78–328) of the RAD51D protein that interacts with XRCC2 and RAD51C for efficient homologous recombination repair.[23] This variant was projected as disease-associated by four of the five different *in silico* estimation tools. It has been reported with conflicting interpretations in ClinVar and has a low minor allele frequency among South Asian populations in gnomAD. Previously, this variant was reported as a VUS in multiple studies on BC and/or OC patients from China,[20] Taiwan,[16] Greece, Romania, and Turkey,[25] gastric cancer patients from Italy,[26] and unselected pancreatic ductal adenocarcinoma patients of Asian origin.[27] Based on the location of this alteration, *in silico* prediction, and clinical data, p.Ile311Asn was categorized as a VUS.

Our investigation has some limitations that need to be acknowledged. First, the use of DHPLC as a pre-sequencing variant screening method, with a sensitivity of <100%, may have resulted in the possibility of missing some pathogenic variants, potentially leading to an underestimation of the reported pathogenic variants in this study. Nevertheless, DHPLC is a valuable method for mutation scanning of hereditary cancer susceptibility genes,[28] as it has been used for comprehensive *RAD51D* variants screening[10] and recently for *BRCA1* and *BRCA2* variants screening in breast and/or ovarian cancer patients.[29] Second, functional analyses were not performed for the identified VUS which limits our ability to definitively assess their pathogenicity. The c.481-26_-23delGTTC variant carrier was deceased; at the time, this study was conducted, hampering the RNA analysis to validate the potential effect of this variant on RNA splicing. Third, the limited number of OC patients (n = 35) in our study cohort, combined with the known association of *RAD51D* with OC risk, might have led to an underestimation of the prevalence of *RAD51D* disease-causing variants in our study.

In conclusion, our study did not identify any pathogenic *RAD51D* variants in the 371 young or familial Pakistani BC/OC patients. However, we identified three VUS (3/371; 0.8%) in this study cohort. Our findings suggest that *RAD51D* variants play a marginal role in BC/OC risk in the Pakistani women. Functional studies are suggested to better understand the impact of *RAD51D* on BC and OC susceptibility in this population. Understanding the genetic landscape of *RAD51D* in different populations is crucial for better risk assessment and managing BC and OC patients worldwide.

Acknowledgments

We are grateful to all study subjects for their participation. We thank the clinicians and Clinical Research Officers (Saima Faisal) for their help in recruitment of study participants.

References

1. Yamamoto H, Hirasawa A. Homologous recombination deficiencies and hereditary tumors. Int J Mol Sci 2021;23:348.
2. Loveday C, Turnbull C, Ramsay E, Hughes D, Ruark E, Frankum JR, *et al*. Germline mutations in *RAD51D* confer susceptibility to ovarian cancer. Nat Genet 2011;43:879-82.
3. Suszynska M, Ratajska M, Kozlowski P. BRIP1, RAD51C, and *RAD51D* mutations are associated with high susceptibility to ovarian cancer: Mutation prevalence and precise risk estimates based on a pooled analysis of~ 30,000 cases. J Ovarian Res 2020;13:50.
4. Hu C, Hart SN, Gnanaolivu R, Huang H, Lee KY, Na J, *et al*. A population-based study of genes previously implicated in breast cancer. N Engl J Med 2021;384:440-51.
5. Yang X, Song H, Leslie G, Engel C, Hahnen E, Auber B, *et al*. Ovarian and breast cancer risks

associated with pathogenic variants in RAD51C and *RAD51D*. J Natl Cancer Inst 2020;112:1242-50.
6. Rashid MU, Muhammad N, Khan FA, Shehzad U, Naeemi H, Malkani N, *et al*. Prevalence of RECQL germline variants in Pakistani early-onset and familial breast cancer patients. Hered Cancer Clin Pract 2020;18:25.
7. Rashid MU, Khan FA, Muhammad N, Loya A, Hamann U. Prevalence of PALB2 germline mutations in early-onset and familial breast/ovarian cancer patients from Pakistan. Cancer Res Treat 2019;51:992-1000.
8. Rashid MU, Muhammad N, Naeemi H, Khan FA, Hassan M, Faisal S, *et al*. Spectrum and prevalence of BRCA1/2 germline mutations in Pakistani breast cancer patients: Results from a large comprehensive study. Hered Cancer Clin Pract 2019;17:27.
9. Rashid MU, Muhammad N, Faisal S, Amin A, Hamann U. Deleterious RAD51C germline mutations rarely predispose to breast and ovarian cancer in Pakistan. Breast Cancer Res Treat 2014;145:775-84.
10. Gutiérrez-Enríquez S, Bonache S, Ruíz de Garibay G, Osorio A, Santamariña M, Ramón y Cajal T, *et al*. About 1% of the breast and ovarian Spanish families testing negative for BRCA1 and BRCA2 are carriers of *RAD51D* pathogenic variants. Int J Cancer 2014;134:2088-97.
11. Tian Y, Pesaran T, Chamberlin A, Fenwick RB, Li S, Gau CL, *et al*. REVEL and BayesDel outperform other *in silico* meta-predictors for clinical variant classification. Sci Rep 2019;9:12752.
12. Richards S, Aziz N, Bale S, Bick D, Das S, Gastier-Foster J, *et al*. Standards and guidelines for the interpretation of sequence variants: A joint consensus recommendation of the American College of medical genetics and genomics and the association for molecular pathology. Genet Med 2015;17:405-24.
13. Akbar F, Siddiqui Z, Waheed MT, Ehsan L, Ali SI, Wiquar H, *et al*. Spectrum of germline pathogenic variants using a targeted next generation sequencing panel and genotype-phenotype correlations in patients with suspected hereditary breast cancer at an academic medical centre in Pakistan. Hered Cancer Clin Pract 2022;20:24.
14. Ajaz S, Zaidi SZ, Ali S, Siddiqa A, Memon MA. Germline mutation analysis in sporadic breast cancer cases with clinical correlations. Front Genet 2022;13:820610.
15. Mannan AU, Singh J, Lakshmikeshava R, Thota N, Singh S, Sowmya T, *et al*. Detection of high frequency of mutations in a breast and/or ovarian cancer cohort: Implications of embracing a multi-gene panel in molecular diagnosis in India. J Hum Genet 2016;61:515-22.
16. Lin PH, Kuo WH, Huang AC, Lu YS, Lin CH, Kuo SH, *et al*. Multiple gene sequencing for risk assessment in patients with early-onset or familial breast cancer. Oncotarget 2016;7:8310-20.
17. Nurmi A, Muranen TA, Pelttari LM, Kiiski JI, Heikkinen T, Lehto S, *et al*. Recurrent moderate-risk mutations in Finnish breast and ovarian cancer patients. Int J Cancer 2019;145:2692-700.
18. Castéra L, Krieger S, Rousselin A, Legros A, Baumann JJ, Bruet O, *et al*. Next-generation sequencing for the diagnosis of hereditary breast and ovarian cancer using genomic capture targeting multiple candidate genes. Eur J Hum Genet 2014;22:1305-13.
19. Singh J, Thota N, Singh S, Padhi S, Mohan P, Deshwal S, *et al*. Screening of over 1000 Indian patients with breast and/or ovarian cancer with a multi-gene panel: Prevalence of BRCA1/2 and non-BRCA mutations. Breast Cancer Res Treat 2018;170:189-96.
20. Kwong A, Shin VY, Chen J, Cheuk IW, Ho CY, Au CH, *et al*. Germline mutation in 1338 BRCA-negative Chinese hereditary breast and/or ovarian cancer patients: Clinical testing with a multigene test panel. J Mol Diagn 2020;22:544-54.
21. Pelttari LM, Kiiski J, Nurminen R, Kallioniemi A, Schleutker J, Gylfe A, *et al*. A finnish founder mutation in *RAD51D*: Analysis in breast, ovarian, prostate, and colorectal cancer. J Med Genet 2012;49:429-32.
22. Hauke J, Horvath J, Groß E, Gehrig A, Honisch E, Hackmann K, *et al*. Gene panel testing of 5589 BRCA 1/2-negative index patients with breast cancer in a routine diagnostic setting: Results of the German consortium for hereditary breast and ovarian cancer. Cancer Med 2018;7:1349-58.
23. Kim YM, Choi BS. Structural and functional characterization of the N-terminal domain of human Rad51D. Int J Biochem Cell Biol 2011;43:416-22.
24. Yurgelun MB, Allen B, Kaldate RR, Bowles KR, Judkins T, Kaushik P, *et al*. Identification of a variety of mutations in cancer predisposition genes in patients with suspected Lynch syndrome. Gastroenterology 2015;149:604-13.e20.
25. Tsaousis GN, Papadopoulou E, Apessos A, Agiannitopoulos K, Pepe G, Kampouri S, *et al*. Analysis of hereditary cancer syndromes by using a panel of genes: Novel and multiple pathogenic mutations. BMC Cancer 2019;19:535.
26. Tedaldi G, Pirini F, Tebaldi M, Zampiga V, Cangini I, Danesi R, *et al*. Multigene panel testing increases the number of loci associated with gastric cancer predisposition. Cancers 2019;11:1340.
27. Cremin C, Lee MK, Hong Q, Hoeschen C, Mackenzie A, Dixon K, *et al*. Burden of hereditary cancer susceptibility in unselected patients with pancreatic ductal adenocarcinoma referred for germline screening. Cancer Med 2020;9:4004-13.
28. Marsh DJ, Howell VM. The use of denaturing high

performance liquid chromatography (DHPLC) for mutation scanning of hereditary cancer genes. Methods Mol Biol 2010;653:133-45.
29. Semerci Sevimli T, Sevimli M, Manguoğlu AE, Lüleci G. Turkish population-based screening for first identified changes of BRCA1 and BRCA2 genes in breast and/or ovarian cancer patients. Egypt J Med Hum Genet 2024;25:51.

Author Contributions

Conceived and designed the analysis: MUR and UH; Collected the data: NM and MSA; Contributed data or analysis tools: NM, MSA, MUR and UH; Performed the analysis: NM, MSA, MUR and UH; Wrote the paper: NM, MSA, MUR and UH.